Camp Cookout Catapult Glider

B Matthews
July 2011

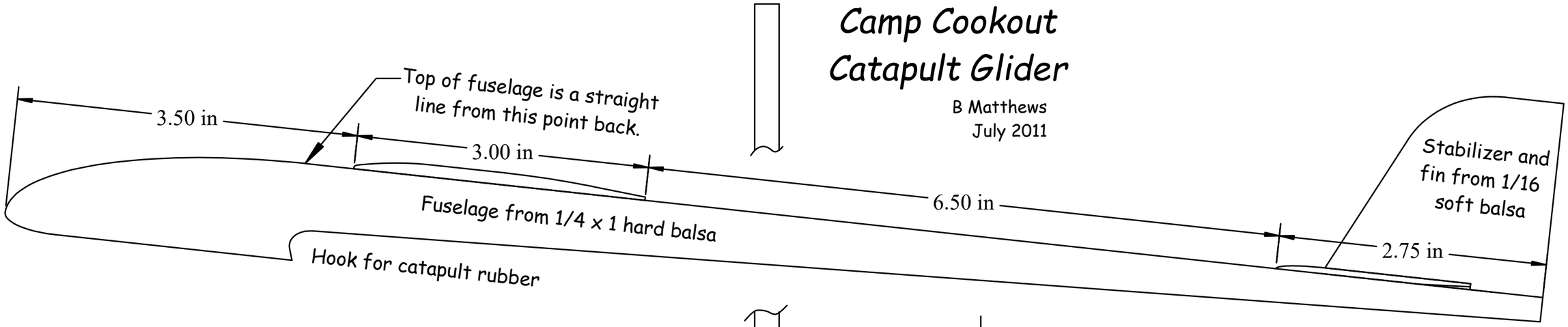

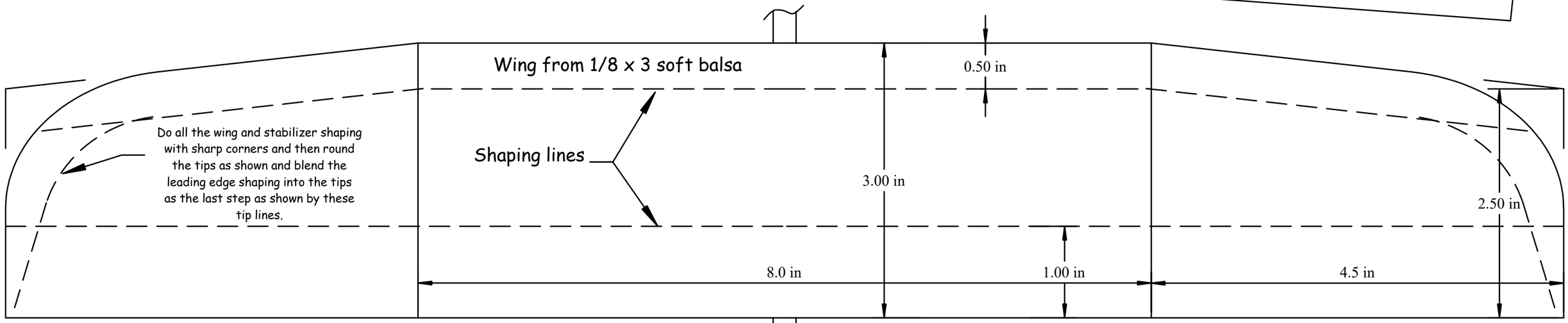

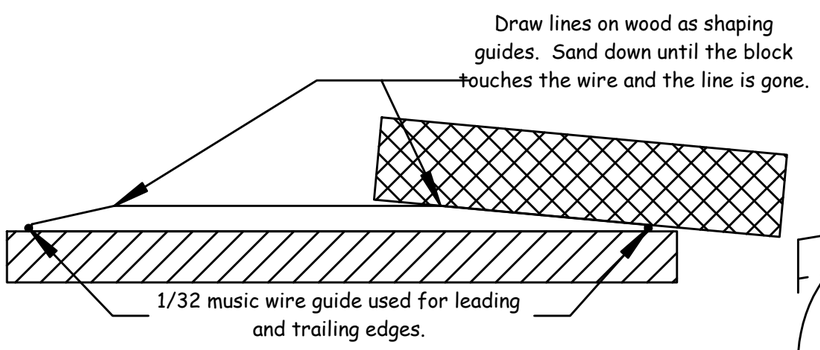

Then round over the transitions to make the airfoil more smooth and lightly round the leading edge.

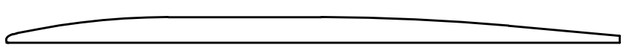

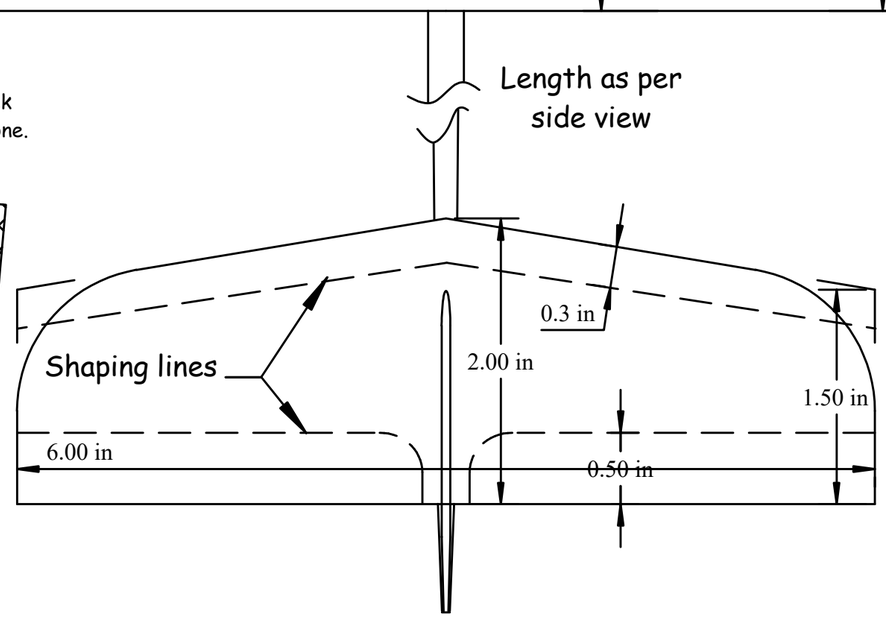

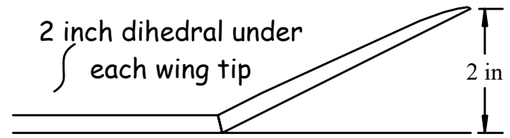
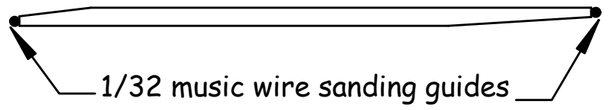
Stabilizer is shaped the same way as the wing. But to produce some "up" trim the stabilizer is flipped over to make the trailing edge taper.